VIKING
FOOD SOLUTIONS

FILLING AID

EASYBAGGER PLUS



EASYBAGGER PLUS



Your Benefits

- The Viking Easybagger PLUS filling aids are used to boost productivity when filling vacuum bags manually. The system can be used for new or existing belt machines.
- The Easybagger PLUS consists of three modules: feed belt, bag dispenser and finger belt.
- The Easybagger PLUS feed belt module aligns the products coming from the customer's conveyor belt to the left or right side of the feed belt.
- The Easybagger PLUS bag dispenser module provides up to 10 different formats of vacuum bags for parallel use and thus enables a quick change of product widths. The bag dispenser module can be placed above the loading belt of a belt machine. The bag dispenser can easily be divided into two segments and moved to the side for cleaning and maintenance work.
- The Easybagger PLUS finger belt module consists of two filling stations including 10 narrow, driven finger belts in total. These two filling stations can be used independently by up to two employees. The bags are removed from the bag dispenser, filled and transferred to a belt machine positioned downstream. Depending on the product size, the appropriate bag format is placed over the required number of fingers.
- The product is conveyed into the bag by pressing the foot switch. As a result, the bag openings are only minimally soiled.
- The hygienic design allows for easy cleaning.
- Great attention has been paid to ergonomics and safety.
- The packaging system is rugged and made of stainless steel.



The bags can be removed according to the desired bag width.



Improves ergonomics and hygiene; reduces the need for operator interventions when filling; optimizes the filling speed.

EASYBAGGER PLUS

VIKING FOOD SOLUTIONS

Easybagger PLUS Bag Dispenser Module

- 10 bag pull-off units.
- 10 receptacle platforms for E2 boxes.
- For service purposes simple to divide.
- Stable frame design.

Easybagger PLUS Finger Belt Module

- 10 driven finger belts.
- Cleaning of the finger belt by folding-up and secured belt release.
- Belt speeds can be set independently on each operating side.
- Synchronized operation to a downstream belt machine with synchronized loading belt possible (option).

Easybagger PLUS Feed Belt Module

- Independently adjustable belt speeds on each operating side.
- Adaptable spring pretensioning of the product slider.

Easybagger PLUS –
Productivity boost in manual bag filling



Corrosion-resistant stainless steel construction.
Easy-cleaning and hygiene-friendly machine design.

EASYBAGGER PLUS



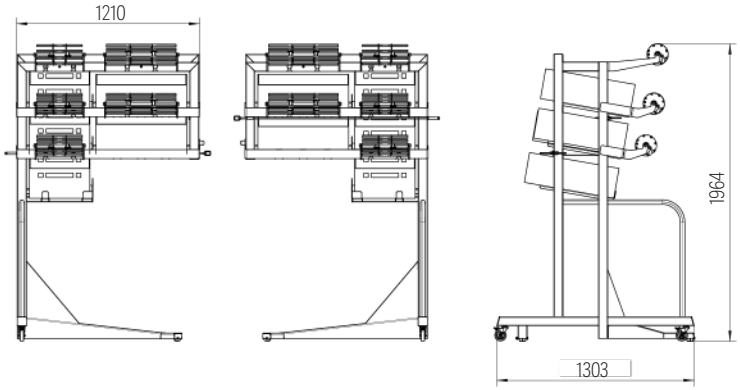

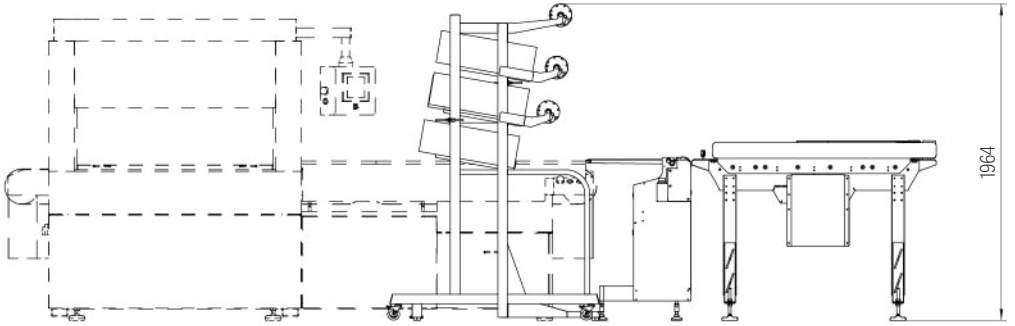

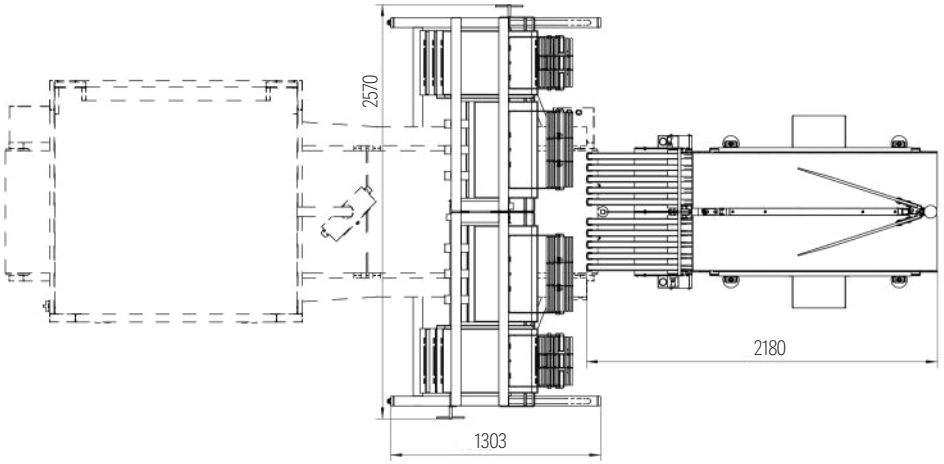

Technical Data

Easybagger PLUS Bag Dispenser Module	
Maximum product weight	30 kg
Bag length	250 - 1000 mm
Bag width	200 - 560 mm
Bag type	chain bags
Weight	approx. 280 kg

EASYBAGGER PLUS



Technical Data

Easybagger PLUS Finger Belt Module	
Belt speed	variable
Free length of product conveyor belt	500 mm
Width of finger belt	5 x 30 mm
Clearance of finger belt	71 mm
Weight	approx. 120 kg
Easybagger PLUS Feed Belt Module	
Maximum product width	330 mm
Belt speed	variable
Weight	approx. 200 kg

Easybagger PLUS Finger Belt Module

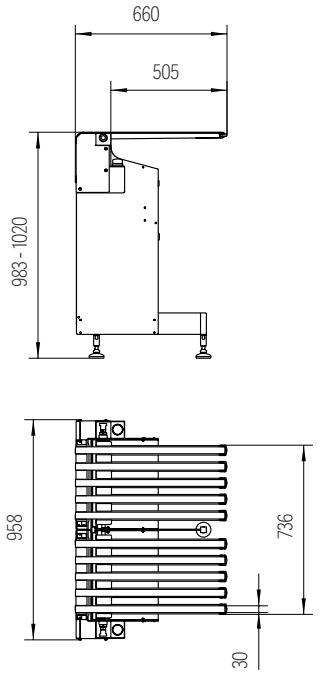

Easybagger PLUS Feed Belt Module

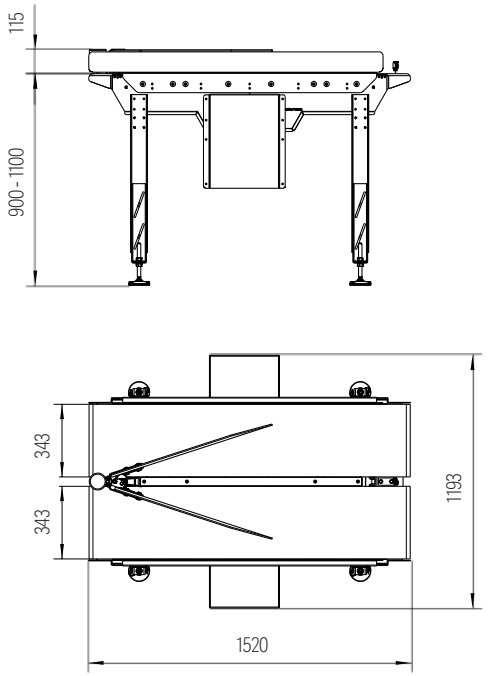







VIKING
FOOD SOLUTIONS

1300 88 99 51

hello@vikingfoodsolutions.com.au

35 Shirley Way, Epping VIC 3076

9 Mcilwraith Street, Wetherill Park NSW 2164

21 Hoyle Road, Hope Valley WA 6165

27 Beal Street, Meadowbrook QLD 4131

EQUIPPING THE FOOD INDUSTRY TO **GROW**