VIKING
FOOD SOLUTIONS

BELT MACHINES

VK 169 / 170 B



VK 169 / 170 B





Your Benefits

1. Rugged stainless steel construction for maximum durability.
2. Double biactive sealing bars for firm and reliable seals.
3. Expansion cushion in the vacuum chamber for a faster evacuation process.
4. Various options available for a the perfect cut-off of protruding bag material.
5. Several sealing bar heights to adjust to the product.
6. Touch screen for simple and clear operation.
7. Various lid heights for optimum adjustment to the product.
8. Use of tried-and-tested electronics and pneumatics components.
9. Optimized BUSCH vacuum pump combinations to choose from.
10. Hygienic design – easy to clean.
11. Control box heating.

Touch Screen

- Simple and easy touch-screen operation.
- Electronic monitoring of the work process and displays in comprehensible and well-arranged on-screen menus.
- 20 programs activated.
- Alphanumeric display for individual program naming, e.g. product name, bag material, etc.
- Integrated high-precision digital vacuum meter.
- Chamber vacuum displayed in mbar.
- Evacuation, optionally:
  - Optimum – up to the evaporation point.
  - Evacuation time given in tenths of a second.
  - Final vacuum given in mbar.
  - in intervals.
- Sealing time in tenths of a second.
- Cooling time in tenths of a second.
- Waterproof rating IP65.
- Service diagnostic menus.

VK 169 / 170 B

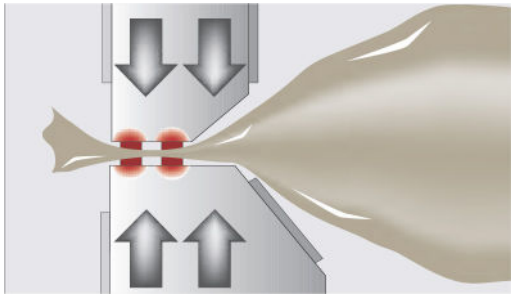

The **double biactive high-pressure sealing and the spring-loaded resistance wires** are standard equipment and ensure safe and reliable seals despite folds, fats, oils or moisture in the seal area. Springs keep the resistance wires in the correct track even with continuous operation.

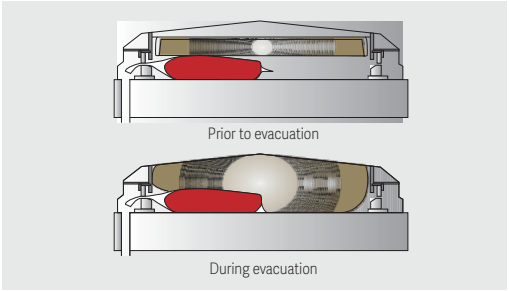

The **expansion cushion** with **removable frame** reduces the evacuation time by up to 30% and prevents folds on the top side of the package.

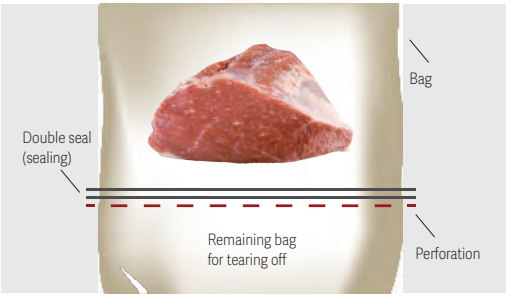

The **cut-off perforation** allows easy removal of protruding bag material after removal of the packages.

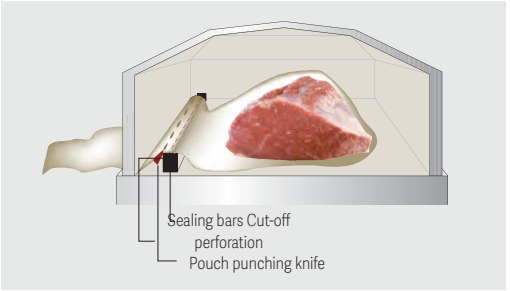

The **pouch punching knives** are necessary so that the package can be evacuated even if the bag opening protrudes from the chamber.



Water-cooled sealing bars increase the durability of the Teflon and the sealing wires.

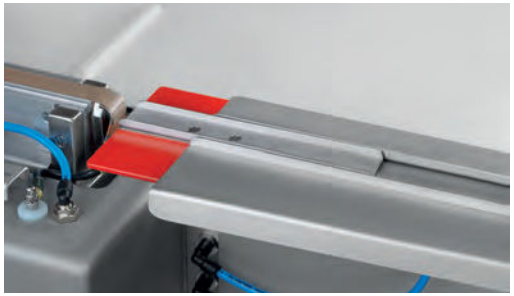

Shrink bag equipment:
Contains raised guide profiles to prevent the shrink bags from sticking or twisting. Pneumatic slide rails close the gap between the guide profiles and the sealing bars, enabling easy bag transport.



Various **lid heights**:
VK 169B – with a lid height of 180 mm.
VK 170B – with a lid height of 300 mm.

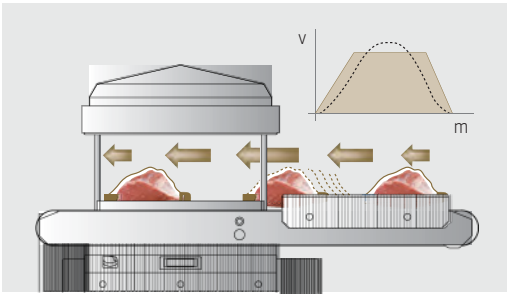

Soft start and stop of the conveyor belt prevents the product from slipping during transfer to the vacuum chamber through controlled acceleration and gentle braking.

VK 169 / 170 B

VIKING FOOD SOLUTIONS

Standard Equipment

- Touch screen.
- Double biactive high-pressure sealing.
- Expansion cushion with removable frame.
- Quick easing of tension of the conveyor belt for easy cleaning.
- Gentle start and stop of the conveyor belt.
- Temperature-controlled control box heating.

Options

- Pouch punching knife.
- Cut-off perforation.
- Shrink bag equipment.
- Water-cooled sealing bars.
- Conveyor belt with cross profiles for round products.
- Outfeed rollers 250 mm or 500 mm.
- Booster and rotary van pump combinations.



Construction made of corrosion-resistant stainless steel.
Cleaning and hygiene-friendly machine design.

VK 169 / 170 B



Technical Data		
Chamber size		890 x 740 mm
Lid height	VK 169B	180 mm
	VK 170B	300 mm
Sealing length		2 x 660 mm
Spacing between bars		650 mm
Fixed sealing bar height		VK 169B 35 or 55 mm
	VK 170B	35, 55 or 75 mm
Other sealing heights		on request
Compressed air consumption		50 NLPM 6 bar
Power supply (without vacuum pump)		approx. 3.2 kW
Built-in rotary vane pump		250 m_3/h
or built-in booster pump		500 m_3/h
Other pump systems		on request
Total weight without pump		approx. 450 kg
with built-in pump		approx. 650 kg

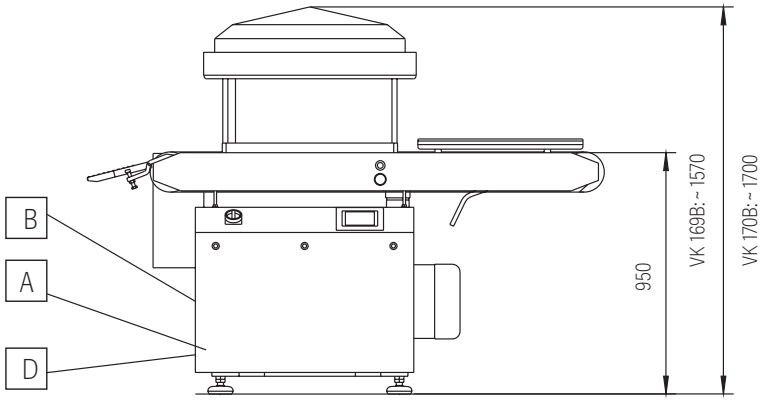

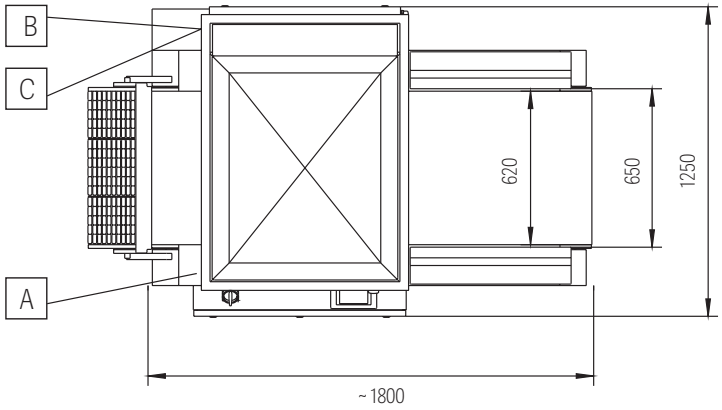

A Power supply B Compressed air connection C Water supply D Water drain







VIKING
FOOD SOLUTIONS

1300 88 99 51

hello@vikingfoodsolutions.com.au

35 Shirley Way, Epping VIC 3076

9 Mcilwraith Street, Wetherill Park NSW 2164

21 Hoyle Road, Hope Valley WA 6165

27 Beal Street, Meadowbrook QLD 4131

EQUIPPING THE FOOD INDUSTRY TO **GROW**